ATMOS MedizinTechnik

Operating Instructions

ATMOS ENT flexible fibre endoscope

English

GA1GB.150252.0

2021-07 Index 03

Table of contents

1 Introduction ... 4
1.1 Notes on operating instructions ... 4
1.2 Explanation of pictures and symbols ... 5
1.3 Intended use ... 6
1.4 Function ... 7
1.5 Intended users ... 7
1.6 Scope of delivery ... 8
1.7 Transport and Storage ... 8

2 Hints for your safety ... 9
2.1 General safety information ... 9
2.2 Danger for users, patients and third parties ... 9
2.3 Avoid damage to the device ... 10

3 Setting up and starting up ... 11
3.1 Device overview ... 11
3.2 Preparing the device ... 11
3.3 Using with other devices ... 12

4 Operation ... 14
4.1 Prior to use ... 14
4.2 Potential movement ... 14
4.2.1 Deflecting the tip ... 14
4.3 Focussing ... 14
4.4 After use ... 15

5 Cleaning and disinfection ... 16
5.1 Prepare for cleaning ... 17
5.2 Manual cleaning and disinfection ... 17
5.2.1 Stage I ... 18
5.2.2 Stage II ... 18
5.2.3 Stage III ... 19
5.2.4 Stage IV ... 19
5.2.5 Phase V ... 19
5.2.6 Remove stubborn deposits from glass surfaces ... 19
5.2.7 Conclude cleaning and disinfection ... 19
5.3 Machine cleaning and disinfection ... 20
5.4 Recommended disinfectants ... 21
5.4.1 Recommended endoscope disinfectants ... 21
5.5 Sterilization ... 22

5.5.1 Preparing for sterilization 22
5.5.2 Gas sterilization 22

6 Maintenance and service 23
6.1 Function check 23
6.2 Further tests 23
6.2.1 Leakage test 23
6.2.2 Checking the fibre optics 24
6.2.3 Checking the glass surfaces and the surface 24
6.3 Sending in the device 25

7 Troubleshooting 26

8 Disposal 28

9 Technical data 29

10 For your notes 30

1 Introduction

1.1 Notes on operating instructions

These operating instructions contain important instructions on how to operate your product safely, correctly and effectively.

These operating instructions serve not only for new operating personnel to be instructed in its use, but also for use as a reference manual. Any reprint - even in extracts - only after written permission from ATMOS.

These operating instructions must always be kept available near the device.

Care, period tests, regular cleaning and proper application are indispensable. That increases, among other things, the reliability and service-life of the product.

Maintenance, repairs and period tests may only be carried out by persons who have the appropriate technical knowledge and are familiar with the product. To carry out these measures the person must have the necessary test devices and original spare parts.

Peruse chapter „2 Hints for your safety“ on page 9, before using the product for the first time. This helps you avoid potentially dangerous situations.

The product complies with all applicable requirements of the Directive 2011/65/EC restricting the use of certain hazardous substances in electrical and electronic equipment (“RoHS”).

The declaration of conformity and our general standard terms and conditions can be obtained on our website at www.atmosmed.com.

The quality management system at ATMOS has been certified according to international standards EN ISO 13485.

These operating instructions are valid for the following devices:

- ATMOS nasopharyngoscope 3.2 mm 950.0243.0

1.2 Explanation of pictures and symbols

In the operating instructions

⚠ DANGER

Warning of a danger which causes immediate death or serious injury. Observe the necessary measures.

⚠ WARNING

Beware of a danger which can cause death or serious injury. Observe the necessary measures.

⚠ CAUTION

Beware of a danger which can easily hurt you. Observe the necessary measures.

ATTENTION

Indication of a danger where the product or other items can be damaged. Observe the necessary measures.

⚠	Warning of a danger which can cause death or serious injury.
ⓘ	Information regarding possible material damage which can be caused.
☞	Useful information on the handling of the device.
1.	Action. Go step by step.
»	Result of an action.

On device and type plate

	Refer to the operating instructions		Follow operating instructions (blue)
	Manufacturer	Rx Only	The US Federal Law restricts this product to sale by or on the order of a physician.
	Manufacturing date		

SN	Serial number	REF	Order number
	Application part type BF		Do not use in magnetic resonance areas
	Not sterile		Professional disposal

1.3 Intended use

Name:	ATMOS ENT flexible fibre endoscopes
Main function:	The application of the ATMOS ENT flexible fibre endoscopes is indicated for endoscopic procedures, for the short term application in the oral cavity up to the pharynx, in the auditory canal to the eardrum and in the nasal cavity for the visualization of orifices and visceral cavities.
Medical indication / application:	For application on humans
Specification of the main function:	High resolution flexible fibre endoscope with a pliable flexible tip, which enables an extended line of vision from 0° to 140° in two opposite directions. All standard C-mount adapters with camera heads can be attached to the eyepiece, this enables a video technical image transmission as live-image or a recording as a picture and/or film for documentation.
User profile:	Doctors and medically trained personnel
Patient groups (e.g. age, weight, health, state):	Patients of all ages without restrictions, where a endoscopic standard examination is to be performed.
Application organ:	Oral cavity, nasal cavity, auditory canal
Application time:	Application up to 60 minutes
Application site:	In ENT practices, outpatient departments, clinics, operating rooms and phoniatrists.

Contraindications:	The application of the ATMOS HNO flexible fibre endoscope is contraindicated if endoscopic procedures are contraindicated.
The product is:	Not active
Sterility:	Not sterile
Single-use product/ reprocessing:	No single-use product. See cleaning and disinfecting instructions in the operating instructions.

1.4 Function

ATMOS endoscopes are indicated for the visualization of orifices and body cavities. Depending on the cross-section, length and locking possibilities, each of the endoscopes is designed for a specific purpose in a particular field of medicine.

The natural orifices are illuminated via extremely thin fibreglass fibres which are thinner than human hair. With the aid of a camera an image can be transferred from the orifice to the screen or display via a substantially larger amount of similar fibreglass fibres.

1.5 Intended users

Endoscopic procedures may only be carried out by qualified professionals (e.g. doctors) with corresponding training and familiarity with endoscopic procedures. In that regard it is the responsibility of the user to continuously inform himself from the manufacturer regarding indication, contraindication, possible complications and risks as well as further developments in the endoscopic procedures.

A thorough understanding of the principles and methods used in laser endoscopy and electro-surgical procedures is necessary to avoid shock and risk of burns to patients and users as well as damage to other equipment and instruments.

1.6 Scope of delivery

- Flexible fibre endoscope
- Aluminium carrying case
- Leakage tester
- Valve cap
- Operating Instructions

1.7 Transport and Storage

Only transport the device in a shipping container, which is padded and offers sufficient protection.

If damage occurs during transport:

1. Document and report the transport damage.
2. Send the product to ATMOS, see Chapter „6.3 Sending in the device“ on page 25.

Environmental conditions for transport and storage:

- Temperature: -20...+70 °C
- Relative air humidity: 5...95 % without condensation
- Air pressure: 70...106 kPa

2 Hints for your safety

The safety of the product complies with all the recognized rules of technology and the Directives of the Medical Devices Act.

Read and follow the safety information carefully before using the product.

2.1 General safety information

Never operate the device, if it shows any obvious safety defects. Check the unit at regular intervals for safety and function.

2.2 Danger for users, patients and third parties

Reduce the risk of infection for you and your patients!

Deadly diseases can be transmitted.

- Clean and disinfect the product after every use.
- Clean and disinfect the device according to the operating instructions.

Avoid misapplication.

Your patient may be seriously injured.

- Prior to each use a function check has to be performed.
- Always have a replacement light source at hand or use light sources which have a substitute bulb.
- The simultaneous use of NMR (Nuclear Magnetic Resonance) and endoscopes can lead to dangers and artefacts. Observe the necessary safety instructions.

Heat development on the light source.

Burns are possible.

- Attention must be paid that the end of the light conductor does not touch the tissue.
- If applicable, rinse the surgical field sufficiently.

Only a fully functional product meets the safety requirements of users, patients and third parties. Therefore, please also observe the following guidelines concerning your product.

2.3 Avoid damage to the device

Incorrect or careless handling of the product.

The product may be damaged.

- Avoid bending the flexible fibre endoscope tightly, wrap it tightly, or subject it to strong impact.
- Do not rotate, pull or put pressure on the flexible parts.
- Always allow the product to cool down to room temperature without any additional cooling measures.

Improper cleaning, disinfection and sterilization.

The product may be damaged.

- Observe the instructions for cleaning, disinfection and sterilization in chapter „5 Cleaning and disinfection“ on page 16.

3 Setting up and starting up

3.1 Device overview

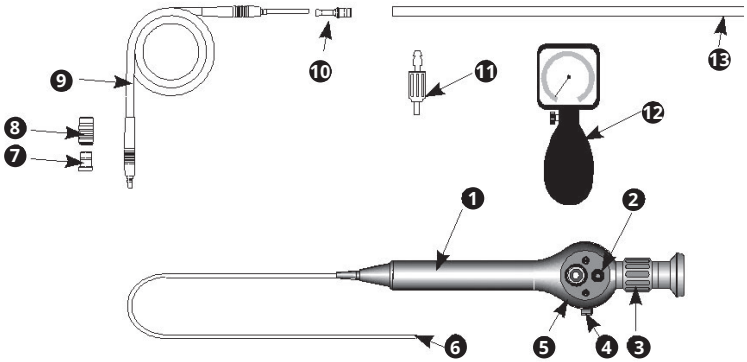

❶ Flexible fibre endoscope with vent valve

❷ Vent valve

❸ Diopter adjustment (focussing)

❹ Deflection lever UP/DOWN

❺ Light cable connection for ACM1/British Standard (on the opposite side of the housing)

❻ Lens

❼ Transfer sleeve for light cable

❽ Light cable sleeve for AMCI connection

❾ Light cable

❿ Light cable sleeve for light sources

⓫ Valve cap

⓬ Leakage tester

⓭ Silicone hose

3.2 Preparing the device

The product is supplied non-sterile.

1. Clean and disinfect the device prior to first use.
2. Sterilize the device where it is necessary for the medical indication.

3.3 Using with other devices

Attention must be paid that devices which are used with the endoscope meet all safety requirements.

Attention must be paid when using the endoscope with an electro medical device, that the terms and conditions for the application part are complied with type BF (insulated, floating application part).

Combined with laser, HF-surgery, pneumatic or electrohydraulic lithotripters, various therapeutic applications are possible.

1. Observe the operating and safety instructions of the applied devices and accessories.

Using with high-frequency surgical devices

⚠ WARNING

Explosion and fire hazard!

Burns and injuries are possible.

- Take the necessary measures to remove or avoid formation of combustible gases.

Predominant depression in the tissue can be caused due to low and unsuitable performance settings or incorrect application.

Serious injury to the patient is possible.

- The patient must be suitably prepared.
- Set the performance setting based on clinical references and only with the necessary training and experience.
- Only switch on the high-frequency current when the application part (electrode) can be seen through the endoscope.

Using with laser devices

⚠ WARNING

Dangerous laser radiation.

Serious damage to the eyes is possible.

- Wear suitable protection glasses.

Burns and undesirable depressions in the tissue

- The laser performance should only be activated when the tip of the laser fibre can be seen through the endoscope.

4 Operation

⚠ WARNING

Danger of infection due to secretion on the endoscope.

Deadly diseases can be transmitted.

- Always keep a used endoscope separate from other reprocessed instruments.
- Clean and disinfect the endoscope after each use within 6 hours.

4.1 Prior to use

1. Connect the accessories and components.
2. Perform a function check.

☞ Check the functionality of accessories and components.

4.2 Potential movement

The flexible fibre endoscope can be moved in three ways:

- It can be moved in all directions along the longitudinal axis.
- It can be rotated.
- The distal end can be bent.

4.2.1 Deflecting the tip

1. Press the deflection lever ❶.

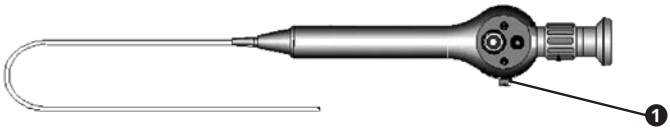

4.3 Focussing

1. Turn the diopter adjustment ❷.

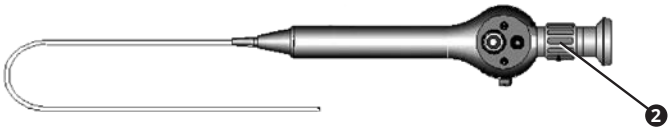

4.4 After use

1. Remove all used adapters from the light cable connection.
2. Remove the seal cap from the luer-lock connection.
3. Visible residue should be removed immediately after surgery using a lint-free disposable cloth.
4. Transport the product dry in a closed disposal container for cleaning and disinfecting.
5. Clean and disinfect the endoscope after each use within 6 hours.

5 Cleaning and disinfection

We recommend you to document any maintenance work and also any exchange of parts.

It is the responsibility of the operator to ensure that the required results for cleaning and disinfection are adhered to. Generally validation and routine monitoring of the procedure is necessary.

The amount of processing cycles depends on different factors and cannot be generalized.

⚠ WARNING

Risk of infection due to secretion on the product and accessories.

Deadly diseases can be transmitted.

- Always wear disposable gloves during any cleaning.
- Clean and disinfect the product after every use.
- Clean and disinfect the device according to the operating instructions.
- Observe relevant national legal regulations and standards for cleaning, disinfection and sterilization. This applies especially to patients with suspected Creutzfeldt-Jacob-Disease (CJD), or possible variants.

ATTENTION

Dried up residue after surgery due to wrong cleaning.

Corrosion damage and difficult cleaning are possible.

- Clean and disinfect the endoscope after each use within 6 hours.
- Do not use pre-cleaning temperatures >45°C.
- Do not use fixing detergent with the substance aldehyde or alcohol.

ATTENTION

Incorrect cleaning and disinfectants.

Damaged surface, faded laser marking or chemically damaged product.

- Observe the correct dosage for neutralizing agents and basic cleaners.
- Do not use abrasives.
- Only use cleaning and disinfectant agents which are recommended by the manufacturer of endoscopes.
- Do not use cleaning and disinfectant agents which could cause stress cracks or corrosion in plastic.
- Observe that the pH value of the application solution is <8.

Incorrect cleaning and disinfection:

Damaged product.

- Never clean the product in an ultrasonic bath.
- Only use cleaning and disinfection devices which are suitable for cleaning flexible fibre endoscopes.
- Do not autoclave the product.
- Only use the recommended disinfectant agents and sterilization methods.
- Avoid excessive pressure or tension to the flexible probe area.
- Ensure that the bending radius of the flexible probe area is at least 40 mm.

5.1 Prepare for cleaning

1. Prior to every cleaning and disinfection a leakage test must be conducted, see chapter „6.2.1 Leakage test“ on page 23.

5.2 Manual cleaning and disinfection

Only clean the device when it is leakproof. See chapter „6.2.1 Leakage test“ on page 23.

Following disinfection with non-virucidal agents, sterilization must be carried out.

Stage	Step	Tempera-ture	Time	Concen-tration	Water quality	Chemistry
I	Cleaning	35 - 45 °C / 95-113 °F	5 min	0.8 %	Drinking water	Cidezyme / Enzol[1]
II	Intermedi-ate rinsing	Room tem-perature (cold)	3 X 1 min	---	Drinking water	---
III	Disinfec-tion	20 - 25 °C / 68 - 77 °F	12 min	---	Drinking water	Cidex OPA[2]
IV	Final rinsing	Room tem-perature (cold)	3 X 2 min	---	VE-W sterile[3]	---
V	Drying	Room tem-perature	---	---	Drinking water	---

[1] Enzymatic cleaner

[2] Ready-to-use solution, 0,55 % orthophtalaldehyd

[3] Demineralized water (demineralised, low germs, maximum 10 germs/ml and endotoxin-poor, maximum 0.25 endotoxin units/ml)

5.2.1 Stage I

☞ The concentration of the cleaning agent depends on the contamination of the product. Observe the manufacturer's instructions for use of the cleaning solution.

1. The product must be completely immersed in the cleaning solution so that all accessible surfaces are covered.

ⓘ Damaged product due to cleaning with a metal brush.

2. Place the product in the solution and clean with a soft cloth or a suitable soft cleaning brush.

» There is no visible residue on the surface.

3. Operate the movable components like focussing and deflection lever in the solution.
4. Thoroughly rinse the movable components with the cleaning solution, at least 5 times, using a disposable syringe (20 ml)

5.2.2 Stage II

Use fresh water for each rinsing cycle.

1. Thoroughly rinse all accessible surfaces of the product three times for at least 1 minute.
2. Operate the movable components like focussing and deflection lever in the solution.
3. Allow the rest of the water to drain off.

5.2.3 Stage III

1. The product must be completely immersed in the cleaning solution so that all accessible surfaces are covered.
2. Operate the movable components like focussing and deflection lever in the solution.

5.2.4 Stage IV

ⓘ Corrosion damage due to chlorine- and chloride residues.

Use fresh, demineralised water for each rinse and rinse thoroughly.

1. Thoroughly rinse the product 3 times completely, all accessible surfaces, for at least 2 minutes.
2. Operate the movable components like focussing and deflection lever in the solution.
3. Allow the remaining water to drain off sufficiently.

☞ If the product is not sufficiently rinsed, stubborn residue could develop on the glass surface.

5.2.5 Phase V

1. Dry the product with a lint-free cloth.
2. Areas which cannot be accessed with a cloth must be dried with medical-quality compressed air (p max. = 0.5 bar).

5.2.6 Remove stubborn deposits from glass surfaces

☞ Stubborn deposits develop when the device is not rinsed sufficiently.

1. Clean the glass surfaces with suitable cleaning paste or with a cotton bud soaked in alcohol.

5.2.7 Conclude cleaning and disinfection

1. Check whether all visible surfaces are without residue. If residue is found, repeat the cleaning and disinfection.

2. If you have disinfected with non-virucidal disinfectants, you must sterilize the product.

☞ If stubborn residue cannot be removed by cleaning, the product must be sent to ATMOS or an authorized dealer.

5.3 Machine cleaning and disinfection

Check whether your cleaning and disinfection device for endoscopes is suitable for the ATMOS ENT flexible fibre endoscope. If necessary, check with the manufacturer of your cleaning and disinfection device for endoscopes.

Only clean the device when it is leakproof. See chapter „6.2.1 Leakage test“ on page 23.

Following disinfection with non-virucidal agents, sterilization must be carried out.

1. If the endoscope is highly contaminated, then clean it manually beforehand.
2. Remove the valve cap from the vent valve.

ⓘDamaged endoscope due to connection of the wrong hose.

3. Connect the pressure equalization hose of the cleaning and disinfection device for endoscopes to the valve cap. If necessary use an adapter.

ⓘ Damaged endoscope from temperatures > 65 °C.

4. Select a suitable cleaning and disinfection program with a temperature < 65 °C.
5. Clean and disinfect the endoscope.
6. Check whether all visible surfaces are without residue. If residue is found, repeat the cleaning and disinfection.
7. Soak a cotton bud in lens cleaner or with 70 %- Isopropylalkohol.
8. Clean the following parts with a cotton bud, wiping with circular movements:
   - Objective (distal end)
   - Eyepiece
   - Light guide connection
9. If you have disinfected with non-virucidal disinfectants, you must sterilize the product.

☞ If stubborn residue cannot be removed by cleaning, the product must be sent to ATMOS or an authorized dealer.

5.4 Recommended disinfectants

The recommendation of the disinfectant refers exclusively to the compatibility with the product material. The effectiveness of the product is the responsibility of the user.

ATTENTION

Wrong disinfectant.

Damaged product.

- Only use the recommended disinfectants.
- Do not place the product in alcohol.
- Observe the operating instructions of the manufacturer of the disinfectant. Pay particular attention to the information regarding the concentration and material compatibility.

5.4.1 Recommended endoscope disinfectants

Manual disinfection of endoscopes

Disinfectant	Manufacturer	Remarks:
Gigasept® FF (new) (application concentrate)	Schülke & Mayr, Norderstedt	Not virucidal
Cidezyme® / Enzol®	Johnson & Johnson, New Brunswick (USA)	Not virucidal
Helipur® H plus N	BBraun, Melsungen	Not virucidal
Cidex® OPA	Johnson & Johnson, New Brunswick (USA)	Virucidal

Automatic disinfection of endoscopes

Disinfectant	Manufacturer	Remarks:
neodisher® MediClean forte	Dr. Weigert, Hamburg	Not virucidal
neodisher® SeptoPAC	Dr. Weigert, Hamburg	Virucidal
Cidex® OPA-C	Johnson & Johnson, New Brunswick (USA)	Not virucidal
Adaptaclean™	ASP, Norderstedt	Not virucidal

5.5 Sterilization

Following disinfection with non-virucidal agents, sterilization must be carried out. The effectiveness of the sterilization is the responsibility of the user.

☞ The product cannot be autoclaved.

5.5.1 Preparing for sterilization

The product must be checked prior to every sterilization.

1. Check whether the endoscope, especially the optical surface is clean.
2. Perform a leakage test, see chapter „6.2.1 Leakage test“ on page 23.
3. Check the fibre optics, see chapter „6.2.2 Checking the fibre optics“ on page 24.
4. Check the glass surfaces and the surface, see chapter „6.2.3 Checking the glass surfaces and the surface“ on page 24.
5. The product must not be sterilized if damage or defects are detected. Remedy the defect or send the product to ATMOS or an authorized dealer.

5.5.2 Gas sterilization

The endoscope can be gas sterilized with ethylene oxide (sterivite method). Observe the operating instructions of the manufacturer.

1. Prepare for sterilization, see chapter „5.5.1 Preparing for sterilization“ on page 22.
2. Attach the valve cap.
3. Perform the gas sterilization.
4. Remove the valve cap.

Validated ETO parameters

Gas mixture:	6 % ETO, 94 % $C0_2$
Temperature:	131 °F +/- 5 °F, 55 °C +/- 2 °C
Relative air humidity:	40 – 90 %
Pressure (overpressure):	1.7 bar (170 kPa)
Exposure time:	120 min
Aeration time:	12 h at 131 °F +/-5 °F or 55 °C +/- 2 °C

6 Maintenance and service

Maintenance, repairs and period tests may only be carried out by persons who have the appropriate technical knowledge and are familiar with the product. To carry out these measures the person must have the necessary test devices and original spare parts.

ATMOS recommends: Work should be carried out by an authorized ATMOS service partner. This ensures that repairs and testing are carried out professionally, original spare parts are used and warranty claims remain unaffected.

6.1 Function check

Prior to each use a function check has to be performed.

Never operate the device if you detect any damage. In this case, clean and disinfect the device and send it to ATMOS for repair.

☞ A show-through of light along the highly flexible, thin-walled probe tube is due to the ever-present sheath losses in the case of illumination fibres. This phenomenon does not have a perceptible influence on the illumination intensity at the tip of the endoscope even when it occurs in varying intensity.

Carry out a function check

1. Check that the endoscope is not damaged:
   - The product is hygienically harmless.
   - The surfaces are undamaged.
   - The endoscope has no sharp edges.
   - The distal and proximal glass surfaces are undamaged.
   - The image quality is inconspicuous.

6.2 Further tests

6.2.1 Leakage test

1. Unscrew the valve cap.
2. Connect the silicone hose.
3. Set a pressure of 160 mmHg on the pressure unit.
4. Observe the pressure drop for 30 seconds.

» A pressure drop of max. 2 mmHg is normal.

☞ If the pressure drop is >2 mmHg, send the product to ATMOS or an authorized distributor.

6.2.2 Checking the fibre optics

☞ For this test do not use any cold light source.

1. Hold one side of the fibre optics (e.g. the distal end) toward a bright ceiling light or the like.
2. View the other side relatively close to the eye.

» The individual fibres appear to be bright.

3. Move the side facing the bright ceiling light back and forth.

» The brightness of the fibres now change a little.

☞ If individual fibres remain dark, this is unobjectionable. However, working with the endoscope is severely hampered by a fracture rate of about 10 - 20%.

4. Check that the surfaces of the light inlets and outlets are smooth and clean.
5. If the surfaces show certain deposit layers, or rough fibres can be felt or are withdrawn, send the product to ATMOS for inspection or to an authorized dealer.

☞ An endoscope with damaged fibre optics can lead to inadequate illumination or if used or prepared in this condition, it may lead to continuous damage of the endoscope.

☞ A show-through of light along the highly flexible, thin-walled probe tube is due to the ever-present sheath losses in the case of illumination fibres. This phenomenon does not have a perceptible influence on the illumination intensity at the tip of the endoscope even when it occurs in varying intensity.

6.2.3 Checking the glass surfaces and the surface

1. Check that the glass surfaces on both sides of the endoscope are undamaged, clean and free from deposit layers.
2. Check that the image is sharp and clear in the corresponding working distance. If the image is dull or dusky then the product may be damaged.

3. Check that the surfaces are undamaged and have no sharp edges. Pay attention to dents, mechanical or thermal damage e.g. due to high frequency or laser surgery devices as well as cracks and spallings at the eyepiece.
4. If glass surfaces are damaged, the image quality is impaired or the surfaces are damaged or deformed, the product must no longer be used. Send the product to ATMOS or an authorized dealer.

6.3 Sending in the device

1. Remove and properly dispose of consumables.
2. Clean and disinfect the product and accessories according to the operating instructions.
3. Place used accessories with the product.
4. Fill in the form QD 434 „Delivery complaint / return shipment“ and the respective **decontamination certificate**.

☞ This form is enclosed to each delivery and can be found at www.atmosmed.com.

5. The device must be well padded and packed in suitable packaging.
6. Place the form QD 434 „Delivery complaint / return shipment” and the respective **decontamination certificate** in an envelope.
7. Affix the envelope to the outside of the package.
8. Send the product to ATMOS or to your dealer.

7 Troubleshooting

The product was subjected to a thorough quality control in the factory. Nevertheless, if a problem should occur you can possibly solve it yourself.

Error indication	Possible cause	Remedy
Image is dull, dusky	Dirty glass surfaces	1. Clean the glass surfaces, see chapter „5.2 Manual cleaning and disinfection“ on page 17.
	Stubborn residue, encrusting on the glass surfaces	1. Remove the residue, see „5.2.6 Remove stubborn deposits from glass surfaces“ on page 19. 2. Check the water quality.
	Leaky defective lens system	1. Send in the product for repair.
Image is too dark, insufficient illumination	Dirty glass surfaces	1. Clean the glass surfaces, see chapter „5.2 Manual cleaning and disinfection“ on page 17.
	Stubborn residue, encrusting on the glass surfaces	1. Remove the residue, see „5.2.6 Remove stubborn deposits from glass surfaces“ on page 19. 2. Check the water quality.
	Wrong light cable connection	1. Check that the light cable is fitted properly.
	Fibre optics is defective	1. Check the fibre optics, see chapter „6.2.2 Checking the fibre optics“ on page 24.
	Defective light cable, defective light source	1. Check the light cable and light source.

Error indication	Possible cause	Remedy
Yellowish light	Dirty fibre optics	1. Clean the glass surfaces, see chapter „5.2 Manual cleaning and disinfection“ on page 17. 2. Send in the device for repair.
	Dirty defective light cable	1. Check the light cable e.g. by illuminating a white surface.
Spotting, discolouration	Inadequate cleaning (e.g. protein residue)	1. Subsequent cleaning of the endoscope, if required by thorough rubbing.
	Inadequate rinsing of the endoscope between the reprocessing steps (especially before sterilization)	1. Ensure adequate rinsing between the individual reprocessing steps.
	Infected or too frequently used cleaning and disinfecting solutions.	1. Regularly replace the disinfection and cleaning solutions.
Leakiness	Leaky connections	1. Check the connections between the valve flap, silicone hose and the leakage tester.
	Defective probe hose	1. Send in the device for repair.
Distortion is tight, defective	Defective peak mechanism	1. Send in the device for repair.

8 Disposal

Packaging

1. Please recycle the packing.

Flexible fibre endoscope

Do not dispose of the product with household waste.

The endoscope does not contain any hazardous materials.

1. Clean and disinfect the product according to the operating instructions.
2. In Germany: Send in the product to ATMOS or your specialized dealer. They will dispose of the device professionally.
3. In other countries: Dispose of the product professionally and according to country-specific laws and regulations.

9 Technical data

External diameter	3.2 mm
Operating length	300 mm
Direction of view	0°
Field of view	85°
Depth of focus	6 - 1000 mm
Deflection of the tip on both sides	140°
Imaging fibres	16,000 Pixel
Ambient conditions operation	+15 - +40 °C
	5 to 95 % air humidity (without condensation)
	70 to 106 kPa air pressure
Ambient conditions for transport	-20 - +70 °C
	5 to 95 % air humidity (without condensation)
	70 to 106 kPa air pressure

10 For your notes

ATMOS MedizinTechnik GmbH & Co. KG
Ludwig-Kegel-Straße 16
79853 Lenzkirch / Germany
Phone: +49 7653 689-0
atmos@atmosmed.de

www.atmosmed.com