MedizinTechnik

English

Operating instructions

ATMOS Chair 41 Gyne

503.0550.B

2019-07 Index: 20

Table of contents

1.0 Introduction 5-7
1.1 Intended use 5
1.2 For your safety 5
1.3 Main characteristics 6
1.4 Type label 7
1.5 Technical information 7

2.0 Scope of supply 8

3.0 Setting up and starting up 9-10

4.0 Operation 11-12
4.1 Controls 11
4.2 Programming 12
4.3 Leg rest adjustment 12
4.3 Leg rest (REF 503.0552.0) 12

5.0 Cleaning and care 13-14
5.1 Cleaning 13
5.2 Paper roll replacement ..... 13 - 14
5.3 Recommended surface disinfectants 14
5.3.1 Recommended disinfectant for cushion 14

6.0 Maintenance and servicing 15
6.1 Exchange of upholstery 15

7.0 Trouble shooting 16

8.0 Accessories, further options, consumables .... 17 - 18
8.1 Accessories 17-18
8.2 Further options 17-18
8.3 Consumables 18

9.0 Technical specifications 19

10.0 Disposal 20

11.0 Notes on EMC 21-23

ATMOS

MedizinTechnik GmbH & Co. KG
Ludwig-Kegel-Str. 16
79853 Lenzkirch
Deutschland/Germany

Phone: + 49 7653 689-0

Fax:
+ 49 7653 689-392 (Sales Germany)
+ 49 7653 689-391 (Export Sales)

e-mail: atmos@atmosmed.de
Internet: http://www.atmosmed.de

General survey

This survey also shows options*, which are not part of the basic equipment!

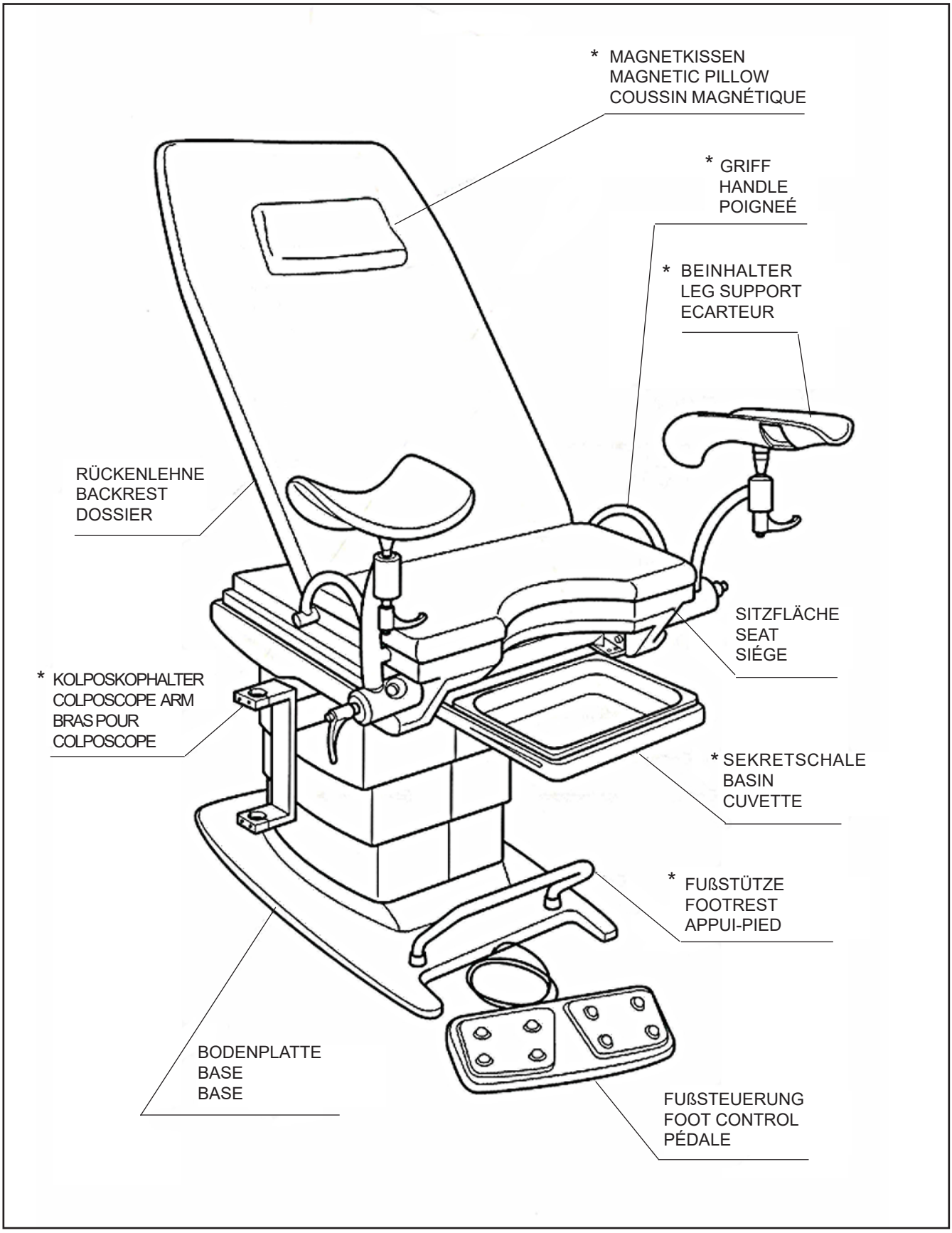

1.0 Introduction

These operating instructions contain important notes on how to operate the ATMOS Chair 41 Gyne safely, correctly and effectively. Their reading helps to avoid risks, and also to reduce repair costs and down-time. That increases, amongst other things, the reliability and service-life of the device. These operating instructions serve not only for new operating personnel to be instructed in its use, but also for use as a reference manual. Full or partial reproduction is subject to prior written approval from ATMOS.

These operating instructions must always be kept available near the device.

Care and safety inspections in conjunction with professional execution provide for operational safety and readiness for use of your ATMOS Chair 41 Gyne and are therefore a must besides regular cleaning.

Repair work and safety inspections may be carried out only by expert personnel authorised by ATMOS. By applying only original spare parts you will have the guarantee that operational safety, readiness for work and the value of your ATMOS Chair 41 Gyne will be preserved.

- The product ATMOS Chair 41 Gyne bears CE marking CE according to the EC Directive of the council for medical products 93/42/EEC and meets the basic requirements of annex I of this directive.
- The product ATMOS Chair 41 Gyne complies with all applicable requirements of the Directive 2011/65/EC restricting the use of certain hazardous substances in electrical and electronic equipment (“RoHS”).
- The declaration of conformity and our general standard terms and conditions can be obtained on our website at www.atmosmed.com.
- The quality management system applied at ATMOS has been certified according to international standards EN ISO 9001 and EN ISO 13485.
- Prior to start-up please peruse chapter 1.2 „For your safety“, in order to be prepared for any possible dangerous situations.

Information provided in these operating instructions

These operating instructions describe the ATMOS Chair 41 Gyne purposes and provide information on how it works, its functions, maintenance, trouble shooting and relative solutions.

Marks and symbols

The following marks and symbols are being used in this handbook:

Note: This points out, that the text contains some important information.

Attention: **This message may appear before certain procedures. If it is ignored, the equipment could be damaged.**

Warning: ☞ **This message may appear before certain procedures. If it is ignored, the operator could be injured and the equipment damaged.**

General information

The ATMOS Chair 41 Gyne does not electromagnetically or otherwise affect other equipment nor is the chair itself affected by these phenomena, caused by other equipment, as it is manufactured in compliance with the Directive, and meets the requirements of the harmonised standard EN 60601-1:1996-03.

1.0 Introduction

1.1 Intended use

Name:	ATMOS Chair 41 Gyne
Main functions:	Examinations and therapy in the gynaecological sector
Med. indications/ application:	Direct contact with the skin exclusively with the prescribed / recommended paper
Specification of the main function:	Positioning and bedding of the patient for gynaecological examination and treatment like pap smear test, colposcopy, diagnostic hysteroscopy, conus biopsy, intravaginal and abdominal echography
Application organ:	Female sexual / reproductive organs
Application time:	Temporary
Application site:	In gynaecologist clinics and practices
Contraindications:	Not to be used outside medical areas: Device must not be used in areas with a potential explosive hazard in rooms specified for medical treatment.
The product is:	active
Sterility:	Not necessary
Single use product / reprocessing:	No single use product

1.2 For your safety

- Max. patient weight: 150 kg
- Max. lifting capacity: 200 kg
- Prior to cleaning, the mains switch must be switched off.
- The ATMOS Chair 41 Gyne may be operated only in rooms used for medical purposes, but not in areas subject to explosion hazards and in oxygen rich environments.

1.0 Introduction

This chapter describes the features of the gynaecological chair ATMOS Chair 41 Gyne. The main equipment components and relative accessories are also illustrated.

Warning:

☞ **This equipment has been conceived for gynaecology purposes only. Neither the chair nor its components must be modified without prior written authorisation.**

Warning:

☞ **It must not be used for purposes other than gynaecological ones (especially not in operating theatres).**

Warning:

☞ **When moving the chair make sure that the patient has her hands at the chair and that third persons and things are in adequate distance from the chair.**

The ATMOS Chair 41 Gyne has the following features:
• The chair has a driven backrest adjustment for the Trendelenburg position and a lift mechanism.

1.3 MAIN CHARACTERISTICS

The ATMOS Chair 41 Gyne offers the following features:

• perfectly symmetrical chair;
• 3 user specifiable position memory systems;
• auto return system to “zero” position;
• control pedals reextractable from the base;
• Trendelenburg position;
• liquid collection basin, plastic or stainless steel (optional);
• leg section extension built in the chair (optional);
• leg rests, adjustable (optional);
• seamless chair upholstery;
• handles; (optional)
• magnetic head-rest cushion (optional);
• paper roll holder integrated in the chair back;
• removable foot rest for the doctor (optional);
• step for helping the patient get on the chair;
• double electrical socket in the base (230 V) **Attention: max. load is 460 W!** (optional)
• low voltage controls (5 V).

☞ Warning:

During the Trendelenburg movement the patient must grasp the handles and have a support for the shoulders.

☞ Warning:

During an anaesthesia, an assistant must attend for safety reasons.

☞ Warning:

When several devices are connected to one socket, the allowed load and leakage currents must be observed.

Note:

In order to ensure the proper functioning of the position memory system, it is highly recommended to reset the chair to “zero” position by pressing key “0”, after every medical visit.

1.4 Type label

The type label is situated on the rear part of the chair and indicates the model, the serial number, the REF and other information (see Fig. 1.1).

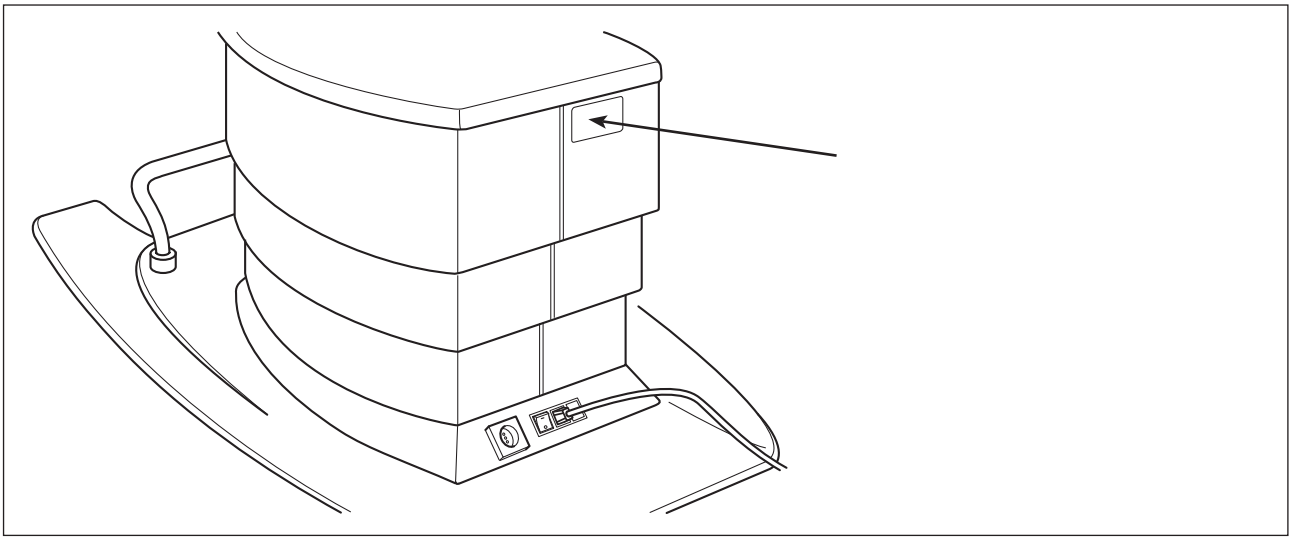

Fig. 1.1

1.5 Technical information

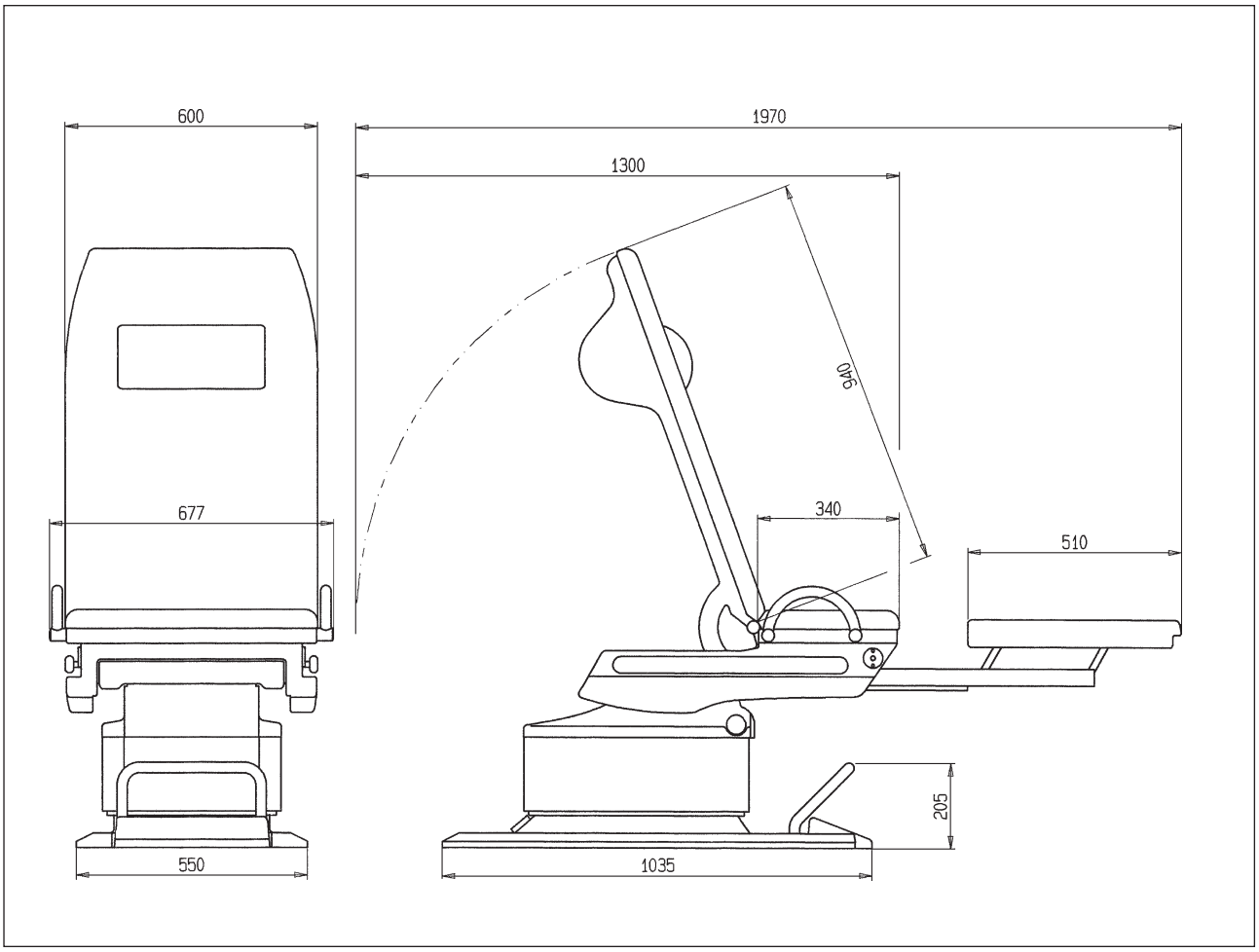

Fig. 1.2

2.0 Scope of supply

☞ For removing the packing, all screws must be loosened and the strap must be removed.

The following components must be supplied inside the packing of the bottom part:

- 1 bottom part of the ATMOS Chair 41 Gyne
- 1 operating instructions
- 1 bottle of detergent
- 1 power supply cable
- 1 guarantee certificate

The following must be supplied inside the packing of the upper part:

- 1 upper part of the ATMOS Chair 41 Gyne

Loosen the two screws that secure the chair to the wooden pallet to free it. A second person is required to help to move the chair from the pallet. Use the transport handles to move the chair. Use the lateral handles at the seat to position the upper part onto the lower part.

1) Place the upper part of the chair on top of the lower part, matching the fixing holes of the seat support with the fixing holes of the counter seat, as shown in the figure.

2) Fix the upper part and the lower part by means of the screws provided.

3) Connect the orange 4 poles crimping terminal of the seat support (Fig. 3.1 A) with that of the counter seat (Fig. 3.1 B) for the mains power supply of the backrest and the respective micro switch.

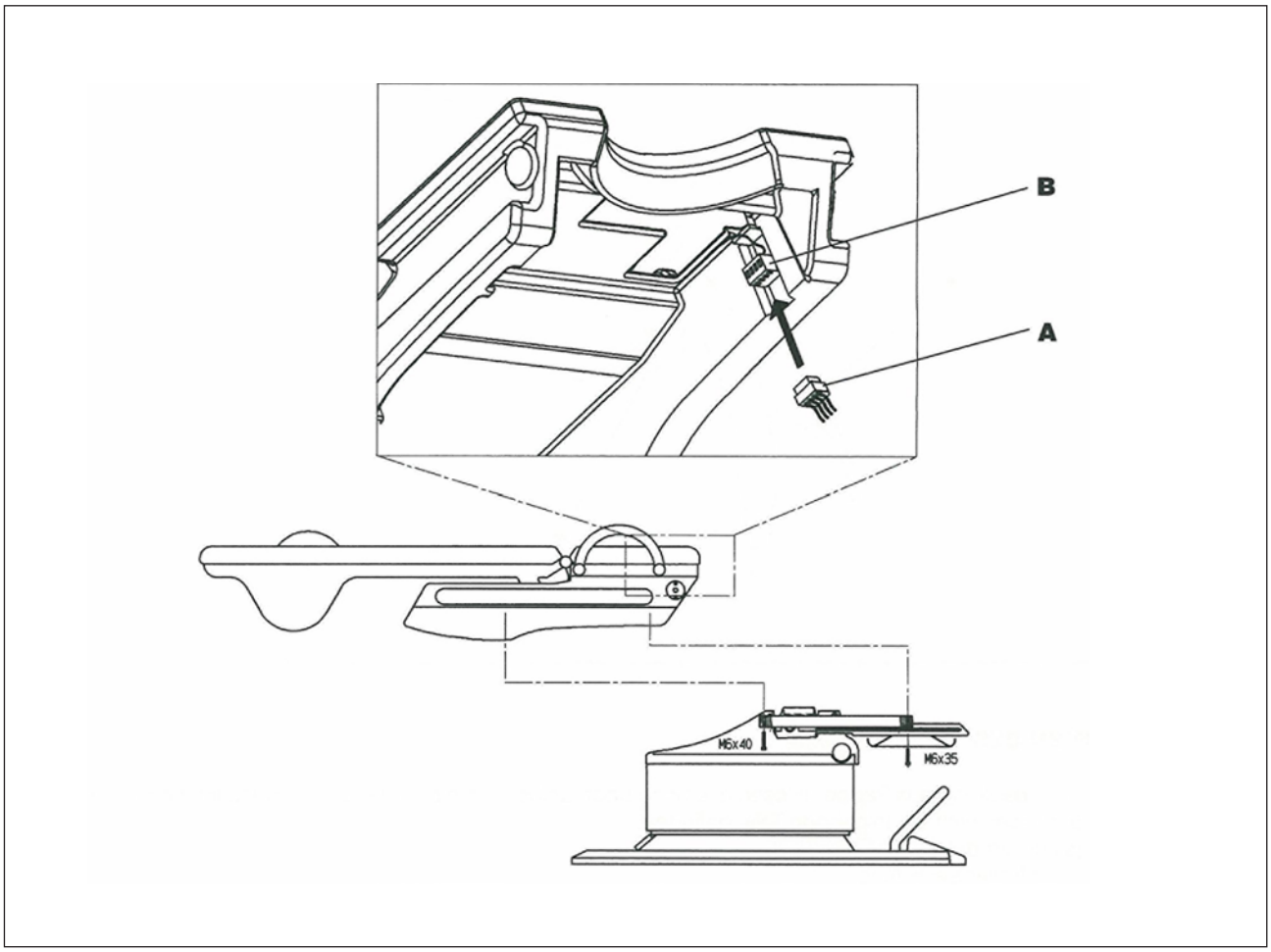

Fig 3.1

Once the two parts of the chair have been assembled and placed in the desired position, securing it, if necessary to the floor, exploiting the holes in the base (see Fig. 3.2), proceed as follows:

1. Remove the handles used to move the chair.
2. Make sure that the place in which the chair is installed is provided with a suitable earth system.
3. Make sure that the voltage of the electrical power supply system of the place in which the chair is installed corresponds to that indicated on the type label.
4. Make sure that the fuses on the back of the chair are fitted firmly as they could have loosened during transport.
5. Plug the power supply cable into the socket in the chair base and then into the mains socket.
6. Turn the chair on by pressing the main ON/OFF switch.

The chair is now ready to be used.
If it should fail to work, see chapter 7.0 Trouble shooting.

☞ Warning:

The two sockets situated in the base may only be used when the chair is secured to the floor.

Note:

If the mains power supply socket is situated at floor level, pit A (Fig. 3.2) in the chair base may be exploited, then feed the power supply cable in, through the panels exploiting the appropriate groove.

Attention:

In this case the chair must be secured to the floor.

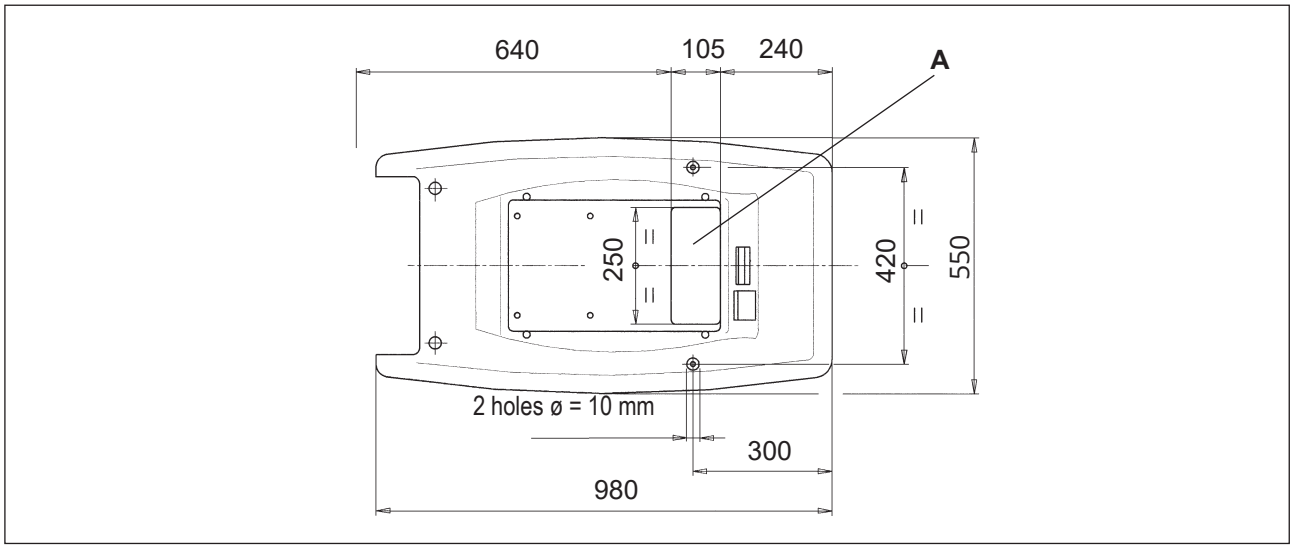

Fig. 3.2

4.0 Operation

Thanks to the integrated control electronics, the chair has many functions, which are easy to use. All the chair adjustments and functions are co-ordinated, processed and stored by an integrated microprocessor. The ATMOS Chair 41 Gyne can easily be controlled when using the foot pedal, with it the gynaecologist has his hands free for the patient.

☞ Warning:

Make sure that the chair has been correctly installed before putting the information provided in this section of the operating instructions into practice (see chapter 3).

4.1 Controls

The chair has the following control elements:

Left-hand foot pedal (Fig. 4.1):

- Up arrow "↑" - upward movement of chair
- Down arrow "↓" - downward movement of chair
- Right-hand arrow "→" - Trendelenburg position -10˚
- Left-hand arrow "←" - Trendelenburg position +25˚

RH FOOT PEDAL CONTROL (Fig. 4.1)

- Up arrow "↑" - upward movement of chair
- Down arrow "↓" - downward movement of chair
- Right-hand arrow "→" - downward tilt of chair back
- Left-hand arrow "←" - upward tilt of chair back
- "0" - Automatic return to "zero" position.
- "I" - Program 1 (position memory)
- "II" - Program 2 (position memory)
- "III" - Program 3 (position memory)

☞ Keep pressed the key for activating the relevant movement. A short key press activates the position memory.

The electronics requires a short delay of approx. 0.5 sec to differentiate between "short key press" and "keep depressed". Therefore, not effort but patience is required.

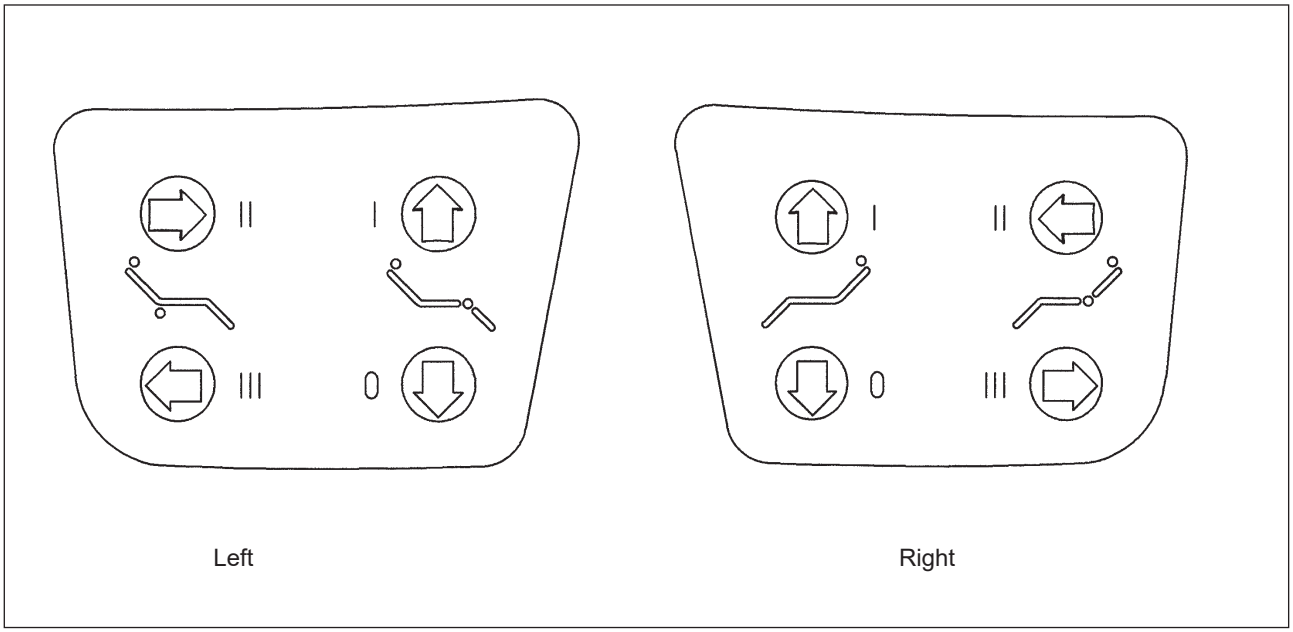

Fig. 4.1

Warning:

☞ **When moving the chair make sure that the patient has her hands at the chair and that third persons and things are in adequate distance from the chair.**

4.2 Programming

Proceed as follows to program (keys “I”,”II” and “III” of the right-hand foot pedal):

1. Bring the chair into basic position by pressing the "0" key shortly.
2. Bring the chair into the requested position.
3. Keep depressed the programming switch M, which is on the “cover”, on the left of the lifting mechanism and lightly press key “I”, “II” or ”III” depending on the requested storage place.
4. An acoustic signal (beep) confirms successful saving.

4.3 Leg rest adjustment

Proceed as follows to move the leg rest:

Hold the patient’s leg with one hand, loosen handle 1 and adjust the height of the leg rest. When the required position is reached, tighten handle 1 again.

To adjust the positionable leg rest 2, loosen handle 3, move the leg rest to the required position and retighten handle 3.

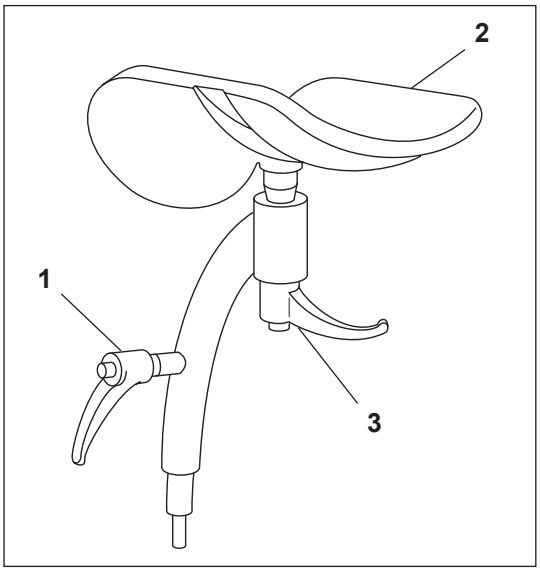

Fig 4.2

4.4 Leg rest (REF 503.0552.0)

For extracting the leg rest:
Catch the leg rest in centre between seat and secretion bowl. Now pull out the leg rest until it is on the same level like the seat.

When pulling the leg rest in:
ATTENTION! Do not touch the guiding rail of the leg rest (see Fig. 4.3). There is a risk of injury!

Grasp the centre of the leg support. With the other hand grasp the metal bar under the leg support and hold it tight. Now slide the support back until it declines. As soon as the leg support declines, take your hand from the metal bar and slide the support backwards until it snaps in.

Fig 4.3

5.0 Cleaning and care

In case the chair is left inoperative for a longer period, it is advisable to cover it with a sheet, to switch it off and disconnect it from the mains supply.

5.1 Cleaning

For a longer service life, cleaning with a wet cloth is recommended at regular intervals.

Upholstery

For removing stains on the upholstery, only the supplied detergent may be used. For cleaning a soft cloth must be used to prevent superficial cracks and to ensure the flexibility and softness of the material.

Substances such as blood need to be removed immediately to prevent stains on the cover material of the upholstery.

Note:
Please reorder the detergent once it is used up.

Parts made of polyurethane

The parts made of polyurethane must be cleaned using a cloth soaked in soapy water.

Painted parts

The painted parts must be cleaned using a cloth soaked in soapy water.

Attention:

Please do not use substances, detergents and strong abrasives for cleaning, and even not for removing tenacious stains.

Furthermore please take care when using colour-intensive substances, like, for example, Betaisodona, as this may lead to discolourations and unattractive stains.

5.2 Paper roll replacement

Proceed as follows to replace the paper roll (see Fig. 5.1):

1. Bring the chair back into horizontal position.
2. Remove the chair back upholstery from the chair back.
3. Block the upholstery using the appropriate locking device integrated in the chair back.
4. Extract the tube support from the chair back.
5. Insert the tube support in the new paper roll.
6. Position the roll in the chair back, running the end of paper upwards.
7. Close the upholstery, making sure that the paper is fed out from the chair back.

Warning:

☞ **The manufacturer cannot be hold liable for any damages that may occur from the non-observance of the regulations stated in these operating instructions.**

☞ **The function of the roll paper feed can be guaranteed only when using the original paper roll (REF 503.0557.0).**

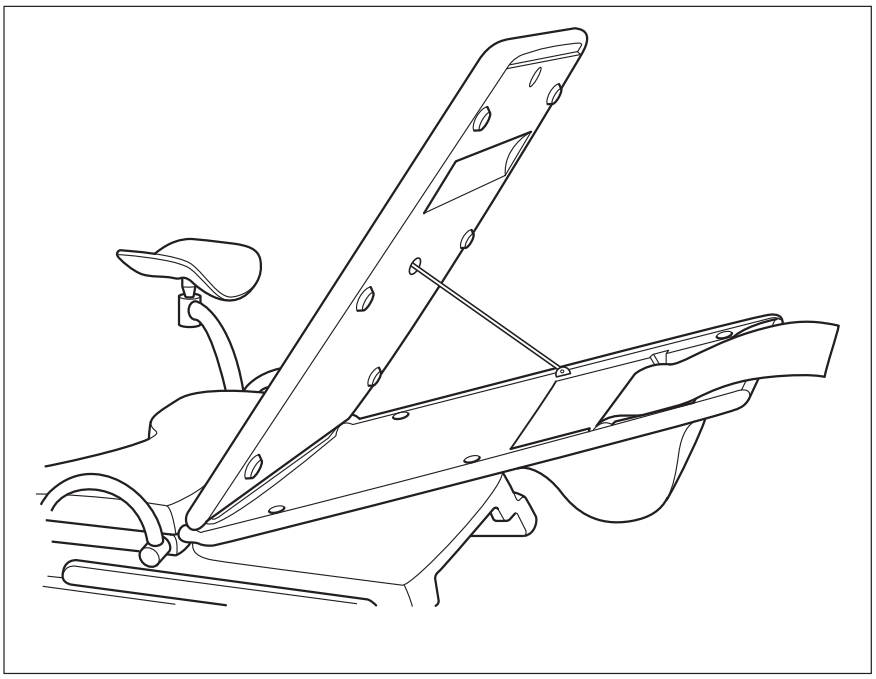

Fig 5.1

5.3 Recommended surface disinfectants

The surfaces of the Chair 41 Gyne can be cleaned with disinfectants with the following active ingredients:

- **quaternary ammoniumchlorides**

5.3.1 Recommended disinfectant for cushion

Disinfectant	Contents	(in 100 g)	Manufacturer
Green & Clean SK (Application concentrate)	Alkyldimethylbenzylammoniumchloride Dialkyldimethylammoniumchloride-Ammoniumchloride	< 1 g	Metasys, Rum (Ausrtia)

6.0 Maintenance and servicing

Maintenance, repairs and period tests may only be carried out by persons who have the appropriate technical knowledge and are familiar with the product. To carry out these measures the person must have the necessary test devices and original spare parts.
ATMOS recommends: work should be carried out by an authorized ATMOS service partner. This ensures that repairs and testing are carried out professionally, original spare parts are used and warranty claims remain unaffected.

At least every 24 months a repeat test of the electrical safety should be performed according to IEC 62353.
ATMOS recommends an inspection according to the manufacturer's specifications.

6.1 Exchange of upholstery

Seat upholstery

This upholstery is fixed with nylon snap fasteners and can therefore easily be removed in pulling it off. If required, adjust the lower and the upper snap fastener for a perfect fit of the upholstery.

Back upholstery

This upholstery is fixed with magnets and nylon snap fasteners. For removing the upholstery, loosen the fixation screws of the upholstery support, which is fixed at the hinges near the seat.

7.0 Trouble-shooting

Problem	Check	Trouble shooting
The chair cannot be moved	Mains cable is connected? Main switch is on? Is the green control lamp illuminated?	Connect the mains cable to the mains supply. Switch on the mains switch. Check the fuses, 2 pieces 3,15 A, at the power input.
	Is the green LED on the board "PWR" switched on and is a beep audible during switch on?	Check the connector on the board. Fuse on the board T 315 mA and T 12,5 A. Check the fuse F 12,5 A between transformer and board.
	Voltage at the plug CN9 (24–28 V AC on the board near the small transformer)	Fuse between transformer and board F 12,5 A or exchange transformer.

Problem	Check	Trouble shooting
Foot control pedal does not work properly	Observe operating instructions.	Press the control pedal straight and not skewed. In order not to twist the pedal, observe the delay regarding the position memory.
	Despite perfect operation, the foot control pedal does not always work properly.	Exchange the board in the foot pedal and check perfect pass of the cable, the way the cover fits perfectly.

Problem	Check	Trouble shooting
Chair only moves upwards and then it stops	Does the relay on the board work properly?	If not, exchange the board.
	Measure the voltage at the motor (24 – 28 V AC).	If voltage is connected and the motor does not work, exchange the motor.

Problem	Check	Trouble shooting
Chair can be moved but position storage is not possible	Check the connector on the board.	Rectify the fault (exchange the connector or the board).
	Check the button for position memory.	If required, exchange the switch.

Problem	Check	Trouble shooting
Trendelen-burg motor does not work	Does the relay on the board work properly?	If not, exchange the board.
	Measure the voltage at the motor (24 – 28 V AC).	If voltage is connected and the motor does not work, exchange the motor.

Problem	Check	Trouble shooting
Deviation from the chair position stored	Correct adjustment of requested position?	Bring the chair into "0" position, then adjust the requested position and store it, as described in the operating instructions.

Problem	Check	Trouble shooting
Motor makes noises	Loud cracking and sometimes the motor does not work.	Probably the gear mechanism is defective, therefore exchange the motor.

8.0 Accessories, further options and consumables

①

②

③

④

⑤

	REF
Accessories	
① **Headrest magnetic pillow**	
Colour: Pastel blue	**503.0556.0**
Colour: Saffron yellow	**503.0556.1**
Colour: Salmon	**503.0556.2**
Colour: Leaf green	**503.0556.3**
Colour: Light grey	**503.0556.4**
Colour: Silk grey	**503.0556.5**
Colour: White	**503.0556.6**
Colour: Sapphire blue	**503.0556.7**
② **Leg support all-cushion** 1 pair**r**	
Colour: Pastel blue	**503.0558.0**
Colour: Saffron yellow	**503.0558.1**
Colour: Salmon	**503.0558.2**
Colour: Leaf green	**503.0558.3**
Colour: Light grey	**503.0558.4**
Colour: Silk grey	**503.0558.5**
Colour: White	**503.0558.6**
Colour: Sapphire blue	**503.0558.7**
③ **Leg support stainless steel** 1 pair, with cushion, foot support plate stainless steel	
Colour: Pastel blue	**503.0554.0**
Colour: Saffron yellow	**503.0554.1**
Colour: Salmon	**503.0554.2**
Colour: Leaf green	**503.0554.3**
Colour: Light grey	**503.0554.4**
Colour: Silk grey	**503.0554.5**
Colour: White	**503.0554.6**
Colour: Sapphire blue	**503.0554.7**
④ **Leg holders „Goepel“** 1 pair, without cushion, simultaneous adjustment of height, inclination and distance	**503.0551.0**
Cushion for leg holders „Goepel“	
Colour: Pastel blue	**503.0565.0**
Colour: Saffron yellow	**503.0565.1**
Colour: Salmon	**503.0565.2**
Colour: Leaf green	**503.0565.3**
Colour: Light grey	**503.0565.4**
Colour: Silk grey	**503.0565.5**
Colour: White	**503.0565.6**
Colour: Sapphire blue	**503.0565.7**
⑤ **Handles, 1 pair, high-grade steel**	**503.0573.0**

8.0 Accessories, further options and consumables

①

	REF
Accessories	
① **Leg rest** extendable, width 440 mm (complete length 1970 mm)	**503.0552.0**

②

② **Secretion Basin, Plastic** To be pulled out, tiltable storage	**503.0571.0**
Secretion basin stainless steel for the attachment kit (REF 503.0571.0) 325 x 265 mm, height 65 mm, additional price	**503.0555.0**

③

③ **Docotor´s foot support**	**503.0559.0**

④

④ **Examination stool** height adjustable, safety chassis on 5 double castors	
Colour: Pastel blue	**503.0570.0**
Colour: Saffron yellow	**503.0570.1**
Colour: Salmon	**503.0570.2**
Colour: Leaf green	**503.0570.3**
Colour: Light grey	**503.0570.4**
Colour: Silk grey	**503.0570.5**
Colour: White	**503.0570.6**
Colour: Sapphire blue	**503.0570.7**

⑤

⑤ **Colposcope holder** mountable left or right, for colposcope für ATMOS i View Kaps support with tube diameter from 30 - 38 mm;	**503.0553.0**

Consumables for the ATMOS Chair 41 Gyne	
Paper role	**503.0557.0**

9.0 Technical specifications

Nominal voltage		230 V ± 10%
Nominal frequency		50-60 Hz
Fuses		2 × T 3.15 A 250 V
Control voltage		5 V
Motor voltage		24 V
Conditions Transport and Storage		+10...+35°C 20...80 % atmospheric pressure from 500...1060 hPa
max. seat height	(mm)	900
min. seat height	(mm)	570
Width	(mm)	677
Length	(mm)	1970
Trendelenburg	(degree)	-10 + 25
Tilt of back rest	(degree)	0 ÷ 70
Net weight	(kg)	200
Dimensions packing	(mm)	800 x 1360 x 845
		800 x 1360 x 365
max. lift	(kg)	150
max. lifting weight		200 kg
Protection class (EN 60601-1)		I
Degree of protection		type B
Classification according to appendix IX EC Directive 93/42/EEC		I
Applied standards		EN 60601-1: 1996-03
Type of application		discontinuous (18 sec ON - 340 sec OFF)
UMDNS-Code		10-960
GMDN-Code		38447

10.0 Disposal

- The ATMOS Chair 41 Gyne is not comprised of any hazardous materials.
- The materials of the housing can be recycled completely.
- Prior to disposal, device and accessories must be decontaminated.
- The materials are to be separated carefully.
- Pay attention to country-specific regulations for disposal (e. g. waste incineration).

Disposal within the EC

The product described above is a high-quality medical product with a long service life. After its life cycle it must be disposed of professional. According to the EC directives (WEEE and RoHS) the device may not be disposed of in domestic waste. Please observe existing national laws and rules for disposal of old devices.

Disposal within the Federal Republic of Germany

In the Federal Republic of Germany the law for electrical devices (ElektroG) rules the disposal of electrical devices. In order to guarantee a proper disposal of your old device, please either pass on your old device to your specialised dealer or send it directly to ATMOS MedizinTechnik for a professional disposal.

Disposal of the packing

All the materials used to pack the chair respect the environment and are 100% recyclable:

- untreated wooden pallet,
- carton,
- polyethylene bag,
- bubble-pack polyethylene.

The recovery and recycling of the materials used to pack the chair help to save on raw materials and to reduce waste volumes. Hand the packing over to a disposal company that is authorised to recover recyclable materials.

Disposal of the chair

Once the chair has reached its expected lifetime and before it is finally disposed of, it must be made unusable by unplugging it from the mains socket and cutting the power supply cable.

The chair disposal does not involve any hazard whatsoever.

For the correct safeguard of the environment, hand the unserviceable chair over to a disposal company that is authorised to recover recyclable and non-recyclable materials.

☞ **The manufacturer can only be hold liable in terms of chair safety, reliability and efficiency provided that:**

• the chair has been installed, adjusted and repaired by personnel authorised by the manufacturer;
• the electrical system of the place in which the chair is installed complies with current standards;
• the equipment is used in compliance with the operating instructions.

11.0 Notes on EMC

Guidelines and Manufacturer´s Declaration - Emissions		
The **ATMOS Chair 41 Gyne** is intended for use in the electromagnetic environment specified below. The customer or user of the **ATMOS Chair 41 Gyne** should ensure that it is used in such an environment.		
Emissions Test	**Compliance**	**Electromagnetic Environment - Guidance**
RF Emissions CISPR 11	Group 1	The **ATMOS Chair 41 Gyne** uses RF energy only for its internal function. Therefore, its RF emissions are very low and are not likely to cause any interference in nearby electronic equipment.
RF Emissions CISPR 11	Class B	The **ATMOS Chair 41 Gyne** is suitable for use in all establishments, including domestic, and those directly connected to the public low-voltage power supply network that supplies buildings used for domestic purposes.
Harmonics IEC 61000-3-2	Class B	
Flicker IEC 61000-3-3	complies	

Guidelines and Manufacturer´s Declaration - Immunity for ATMOS Chair 41 Gyne
The **ATMOS Chair 41 Gyne** is intended for use in the electromagnetic environment specified below. The customer or user of the **ATMOS Chair 41 Gyne** should ensure that it is used in such an environment.

Immunity Test	IEC 60601- Test Level	Compliance Level	Electromagnetic Environment - Guidance
ESD IEC 61000-4-2	± 6 kV Contact ± 8 kV Air	± 4 kV Contact ± 8 kV Air	Floors should be wood, concrete, or ceramics tile. If floors are synthetic, the relative humidity should be at least 30%.
EFT IEC 61000-4-4	± 2 kV Mains ± 1 kV I/Os	± 1 kV Mains	Mains power quality should be that of a typical commercial or hospital environment.
Surges IEC 61000-4-5	± 1 kV symmetric ± 1 kV for input and output power	± 1 kV symmetric not applicable	Mains power quality should be that of a typical commercial or hospital environment.
Voltage Dips / Dropout IEC 61000-4-11	< 5 % U_T (> 95 % Dip of the U_T) for 0.5 Cycle 40 % U_T (60% Dip of the U_T) for 5 Cycles 70% U_T (30 % Dip of the U_T) for 25 Cycles < 5 % U_T (>95 % Dip of the U_T) for 5 s	< 5 % U_T (> 95 % Dip of the U_T) for 0.5 Cycle 40 % U_T (60% Dip of the U_T) for 5 Cycles 70% U_T (30 % Dip of the U_T) for 25 Cycles < 5 % U_T (>95 % Dip of the U_T) for 5 s	Mains power quality should be that of a typical commercial or hospital environment. If the user of the **ATMOS Chair 41 Gyne** demands continued function even in case of interruptions of the energy supply, it is recommended to supply the **ATMOS Chair 41 Gyne** from an uninterruptible current supply or a battery.
Power Frequency 50/60 Hz Magnetic field IEC 61000-4-8	3 A/m	not applicable	Power frequency magnetic fields should be that of a typical commercial or hospital environment.
NOTE U_T is the mains alternating current prior to application of the test levels.			

11.0 Notes on EMC

Guidelines and manufacturer's declaration – Electromagnetic noise immunity – for devices and system which are not life-sustaining

The **ATMOS Chair 41 Gyne** is intended for use in the electromagnetic environment specified below. The customer or user of the **ATMOS Chair 41 Gyne** should ensure that it is used in such an environment.

Immunity Test	IEC 60601- Test Level	Compliance Level	Electromagnetic Environment - Guidance
Conducted RF IEC 61000-4-6	$V_1 = 3\ V_{eff}$ 150 kHz bis 80 MHz	3 V	Portable and mobile communications equipment should be separated from the **ATMOS Chair 41 Gyne** incl. the cables by no less than the distances calculated/listed below. **Recommended distances** $d = (3{,}5 / V_1) * \sqrt{(P)}$ $d = (3{,}5 / E_1) * \sqrt{(P)}$ $d = (7 / E_1) * \sqrt{(P)}$ where „P“ is the max. power in watts (W) and D is the recommended separation distance in meters (m). Field strengths from fixed transmitters, as determined by an electromagnetic site (*a*) survey, should be less than the compliance level (*b*). Interference may occur in the vicinity of equipment containing following symbol.
Radiated RF IEC 61000-4-3	$E_1 = 3$ V/m 80 MHz bis 2,5 GHz	3 V/m	

NOTE 1 With 80 MHz and 800 MHz the higher frequency range applies.

NOTE 2 These guidelines are not applicable in any case. The propagation of electromagnetic sizes is influenced by absorptions and reflections of buildings, objects and people.

11.0 Notes on EMC

a) The field strength of stationary transmitters, such as base stations of cellular phones and mobile terrain radio equipment, amateur radio transmitters, cbm broadcast and TV stations cannot be predestined exactly.
To determine the electromagnetic environment in regard to stationary transmitters, a study of the location is to be considered. If the measured field strength at the location where the **ATMOS Chair 41 Gyne** is used exceeds the above compliance level, the **ATMOS Chair 41 Gyne** is to be observed to verify the intended use.
If abnormal performance characteristics are noted, additional measures might be necessary, e.g. a changed arrangement or another location for the device.

b) Within the frequency range of 150 kHz to 80 MHz the field strength is to be below 3 V/m.

Recommended separations between portable and mobile RF communications equipment and the ATMOS Chair 41 Gyne

The **ATMOS Chair 41 Gyne** is intended for use in electromagnetic environment in which radiated disturbances are controlled. The customer or user of the **ATMOS Chair 41 Gyne** can help prevent electromagnetic interference by maintaining a minimum distance between portable and mobile RF Communications equipment and the **ATMOS Chair 41 Gyne** as recommended below, according to the maximum output power of the communications equipment.

Nominal output of the transmitter in Watts (W)	**Separation distance, depending on transmit-frequency m**		
	150 kHz - 80 MHz $d = (3{,}5/V_1) * \sqrt{(P)}$	80 MHz - 800 MHz $d = (3{,}5/E_1) * \sqrt{(P)}$	800 MHz - 2,5 GHz $d = (7/E_1) * \sqrt{(P)}$
0,01	0,116	0,116	0,233
0,1	0,367	0,367	0,737
1,0	1,16	1,16	2,33
10	3,67	3,67	7,37
100	11,67	11.67	23,33

For transmitters for which the maximum nominal output is not indicated in the above table, the recommended separation distance *d* in meters (m) can be determined using the equation belonging to the respective column whereas *P* is the maximum nominal output of the transmitter in watts (W) acc. to manufacturer´s specification.

NOTE 1 With 80 MHz and 800 MHz the higher frequency range applies.

NOTE 2 These guidelines are not applicable in any case. The propagation of electromagnetic sizes is influenced by absorptions and reflections of buildings, objects and people.

MedizinTechnik

ATMOS MedizinTechnik GmbH & Co. KG
Ludwig-Kegel-Str. 16
79853 Lenzkirch / Germany
Phone: +49 7653 689-0
atmos@atmosmed.de

www.atmosmed.com